MODEL 21DC ILLUMINATOR

The Model 21DC has been designed specifically as a cost effective high quality DC regulated light source for most use in machine vision applications where stability of light output is a requirement. This 150-watt halogen illuminator provides stable, shadow-free, cool illumination to any application when coupled with one of many standard fiber optics. With the Model 21DC it delivers current regulated, DC light output, which is free from power fluctuations that are typically due to variations in line voltage and can often affect an illumination system's performance. The Model 21DC also offers a 0 to 100% intensity control, with a LED power/lamp life indicators and a universal input voltage to accept 90-254VAC. A DB-9 connector on the rear panel allows for remote operation, including a on/off and intensity control using a 0-5VDC analog programming voltage. The design incorporates a rugged housing made of an aluminum extrusion that is powdered coated for maximum durability. A T-slot runs the length of both sides of the housing for integrated mounting capabilities. The innovative 1" diameter V-port designed with three-point contacts, allow for a "non-slip" coupling to almost any fiber optic component. Fiber Optic Goosenecks, specifically, lock into place where otherwise they would rotate within the fiber optic port. Standard accessories for this unit that can be included are a flexible positioning handle, mounting brackets, as well as color and/or IR filter insert. Other options that can be included is a remote operation accessories such as multiple unit controllers, RS232 control and an iris dimming module.

KSE

800-594-2121 · www.ksetexas.com

Features

- Current regulated DC light source
- Universal input voltage, 90-254VAC
- LED power/lamp life indicators
- DB-9 connector for remote operation
- Load dependent variable fan for quiet operation
- Rugged housing made with aluminum extrusion
- T-slot for easy mounting
- Variable intensity control from 0 to 100%
- High output 150-watt EKE lamp
- Optional iris control dimming modules

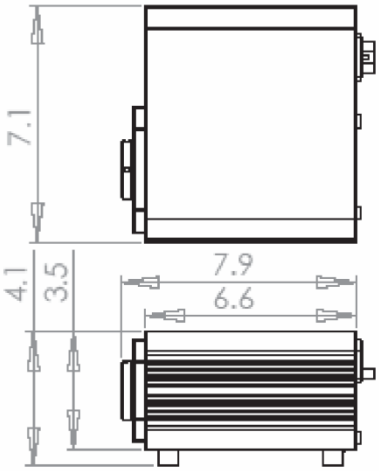

Model 21DC Part Number Matrix

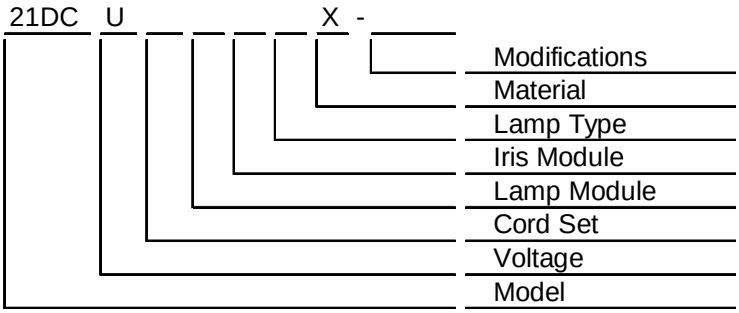

Model:	21DC	Model 21DC		
Voltage:	U	Universal Voltage (90-264 VAC; 50/60Hz)		
Cord Set:	A	Euro/Shuko	K	North America
	C	Australia	L	Switzerland
	D	United Kingdom	Z	North America
	H	Israel	X	No Cord Set
Lamp Module:	1	1.0" (25.4mm) V-port (nosepiece ID)		
	2	0.625" (15.88mm) V-port (nosepiece ID)		
	3	1.0" (25.4mm) V-port for use w/ IR & color filter		
Iris Module:	0	No Iris control		
	1	Iris Control		
Lamp Type:	0	EKE, 3250K (standard)		
	1	EKE-HC, 4200K (high color temp)		
	2	EJV, 3200K (high output)		
Material:	X	Standard Material Finish		
Modifications:	Optional - to be determined (Contact KSE-Texas)			

800-594-2121 · www.ksetexas.com